sens4speed
Sensors Store by TEXYS

RPS
Rotary Position Sensor

Life expectancy	50 million cycles
Operational speed	120 RPM
Environmental sealing	IP 65
Temperature range	-40 to +150°C
Cable type	Raychem 55, 22 AWG
Cable length	1000 mm
Repeatability	0.01 %
Maximum supply voltage	42 V

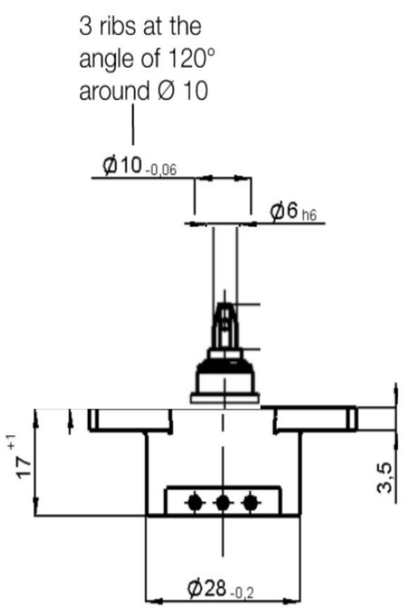

When the shaft marking is pointing to cable (white), the wiper is located in an electrical center position.

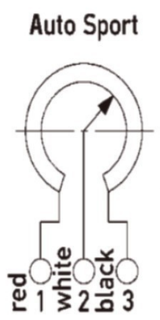

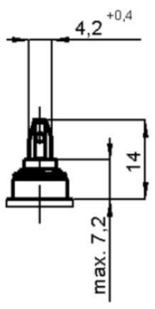

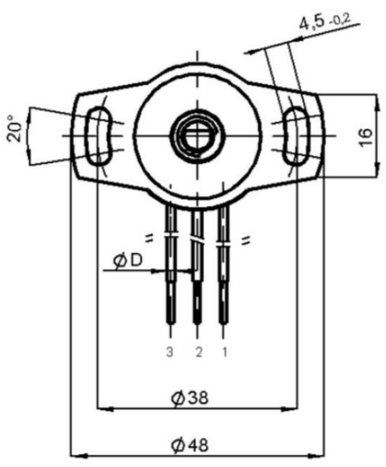

Part No.	Electrical Angle +/-1°	Linearity +/-	Housing Material	Shaft Type	Nominal Resistance +/- 20%
RPS 345 065 101	345	0.30%	Duraplast	Push-on	5K

In the interest of continuous product improvement, we reserve the right to alter without prior notice the specifications and features described in this document

TEXYS INTERNATIONAL
ZA des Chamonds
Rue Edouard Branly
58640 Varennes-Vauzelles
(FRANCE)
Tel. : +33 (0) 3 86 21 27 18
Fax : +33 (0) 3 86 21 24 49